Annexe 2a

machine feed per min. = machine feed per rev. x machine speed

machine feed per rev. = ctg α/2 x toolslide feed per rev.

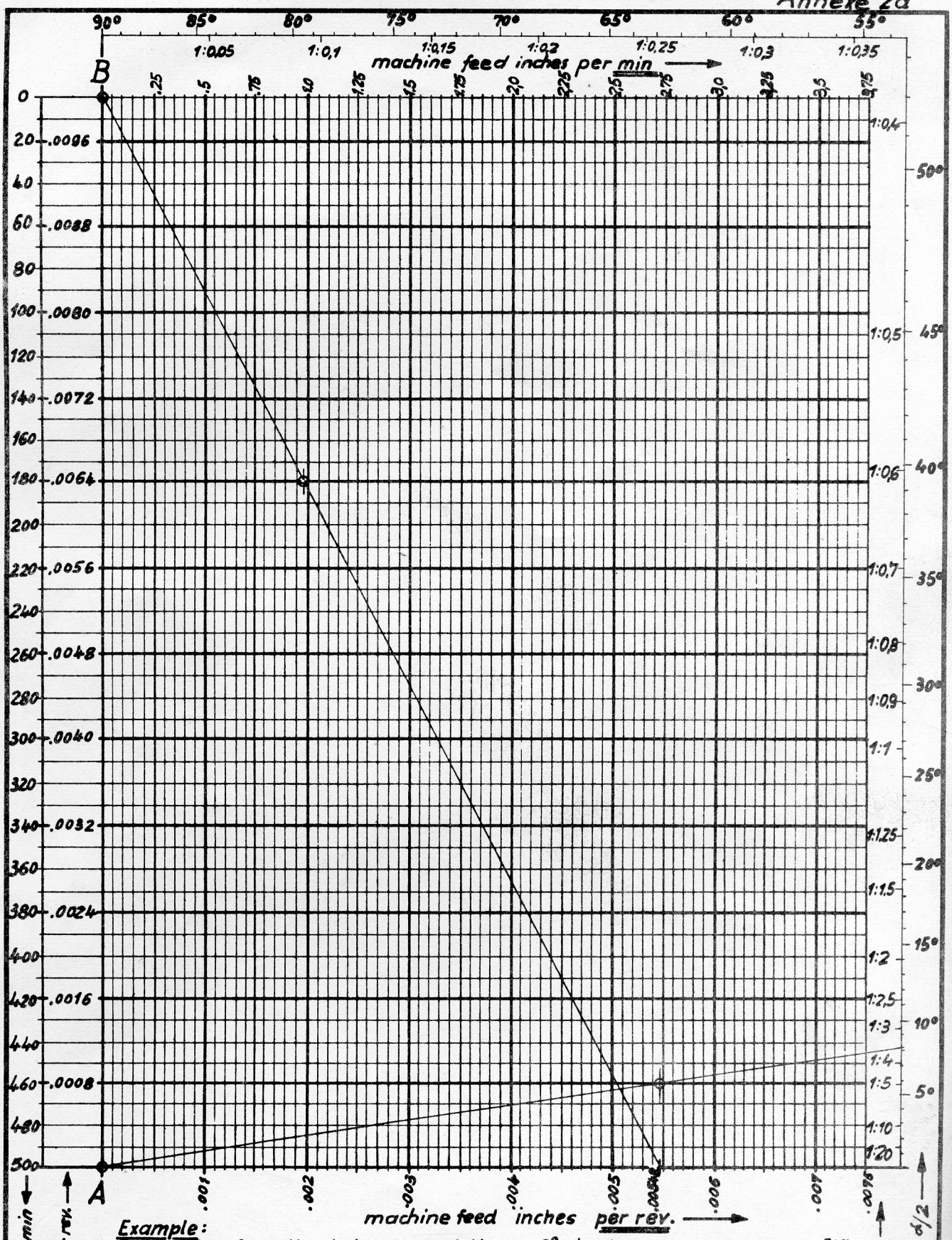

Example:

1) Draw a line from the desired angle, let's say 8°17'50" (ISA steep taper) to point "A".
A toolslide feed of .0008 requires a machine feed of .005486 per rev.

2) Draw a line from machine feed of .005486 per rev. to point "B".
A machine speed of 180 rev. per min results in a machine feed of 0,9874 inch./p.min.

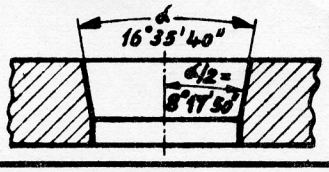

pitch of screw 3/25"	1 feed unit = .0008 per rev.

Gezeichnet	23.4.58	Haug
Geprüft	24.4.58	[illegible]

Emil Wohlhaupter & Co.
Werkzeugfabrik

Diagram of feeds to produce taper angles α from 5°... 90° when taper turning with "WOHLHAUPTER" Facing and Boring Heads UPA4...UPA6-S7

Annexe 2a

machine feed per min. = machine feed per rev. x machine speed

machine feed per rev. = ctg α/2 x toolslide feed per rev.

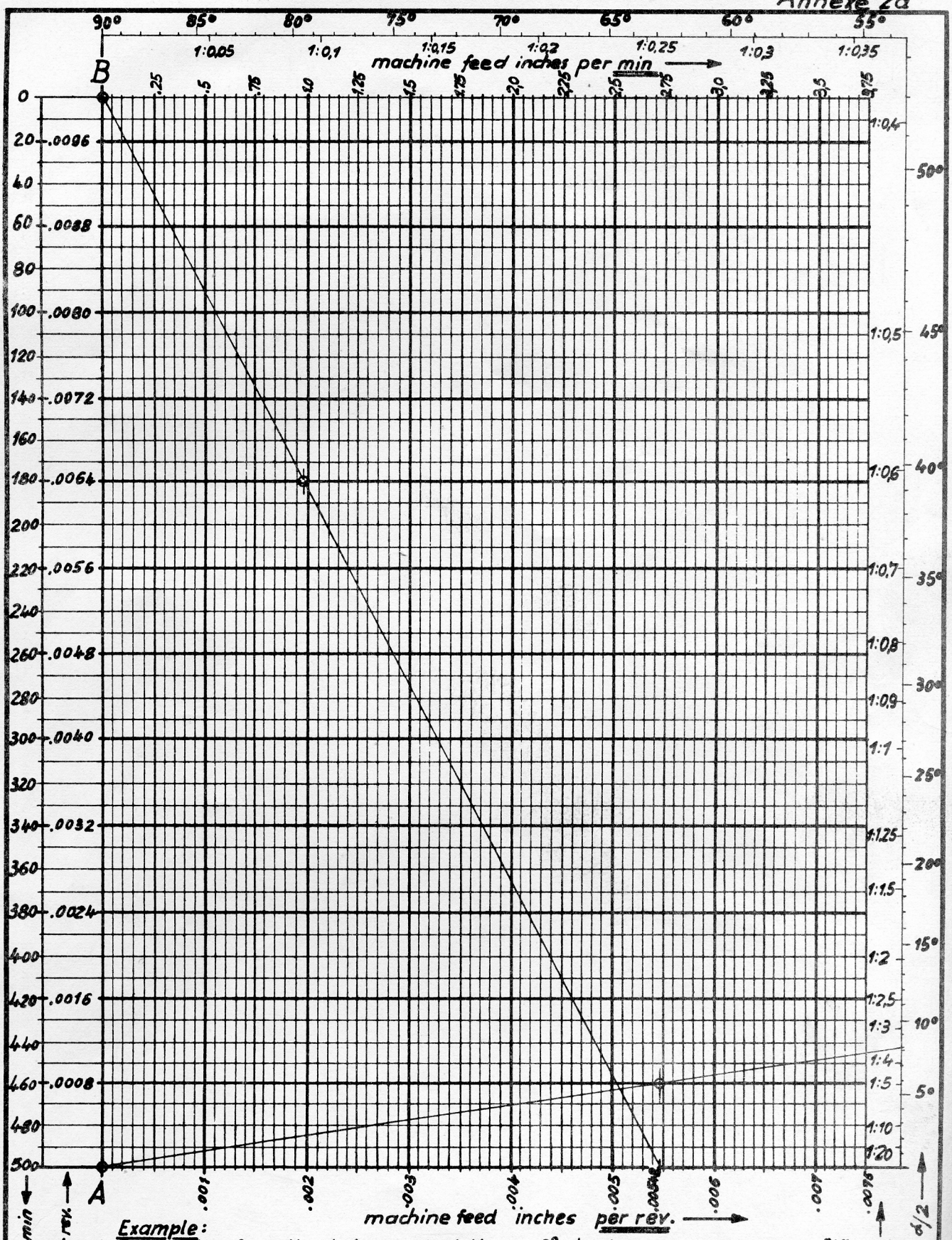

Example:

1) Draw a line from the desired angle, let's say 8°17'50" (ISA steep taper) to point "A".
A toolslide feed of .0008 requires a machine feed of .005486 per rev.

2) Draw a line from machine feed of .005486 per rev. to point "B".
A machine speed of 180 rev. per min results in a machine feed of 0,9874 inch./p.min.

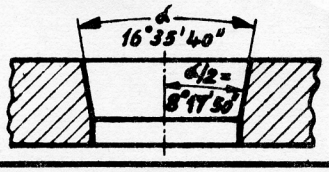

pitch of screw 3/25"	1 feed unit = .0008 per rev.

Gezeichnet	23.4.58	Haug
Geprüft	24.4.58	[illegible]

Emil Wohlhaupter & Co.
Werkzeugfabrik

Diagram of feeds to produce taper angles α from 5°... 90° when taper turning with "WOHLHAUPTER" Facing and Boring Heads UPA4...UPA6-S7

PRICE LIST

WOHLHAUPTER Universal Facing and Boring Heads

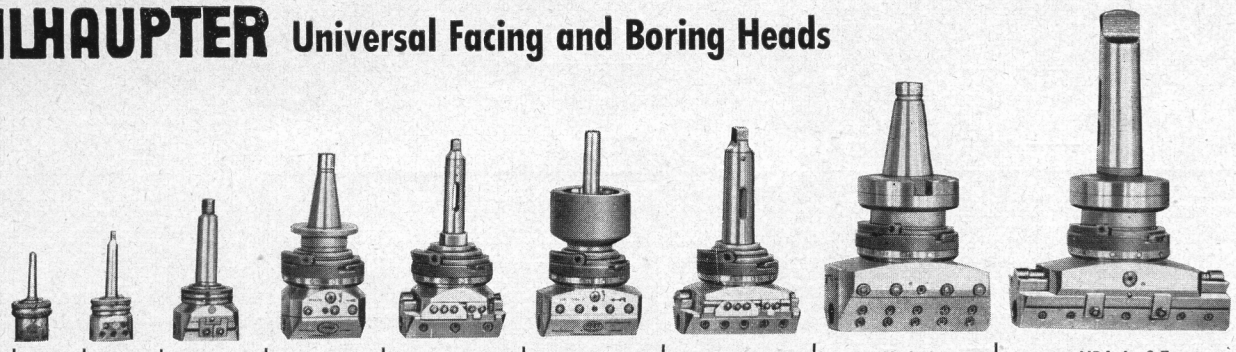

Size	UPA 1	UPA 2	UPA 3	UPA 4	UPA 4 - S 5	UPA 5	UPA 5 - S 6	UPA 6	UPA 6 - S 7
	with standard Morse taper shanks							without shank	
Price apiece									
Extra charge	for special shanks such as steep taper, metric taper and other special type tapers upon request							Price for standard Morse taper shank no. 6 with tang and transverse slot, without driver faces Other shanks upon request	

Extra equipment

In order to obtain the facing ranges and boring depths mentioned in the leaflet, the following extra equipment requires to be used.

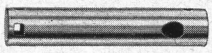

Boring Bar B 412

Boring Bar Holder B 418

Clamping Sleeve Sp 4 - 22:18

For the heads	UPA 1	UPA 2	UPA 3	UPA 4 and 4 S 5	UPA 5 and 5 S 6	UPA 6 and 6 S 7
1 piece of each	no. of order / price	no. of order / price	no. of order / price	no. of order / price	no. of order / price	no. of order / price
Boring bars	Boring tools		B 306 =	B 408 =	B 408 =	B 612 =
	A 03 f =	A 05 f =	B 309 =	B 412 =	B 412 =	B 620 =
	A 03 g =	A 05 g =	B 312 =	B 416 =	B 416 =	B 626 =
Tool holder and boring bar holder		Tool holder	BH 308 =	BH 410 =	BH 513 =	BH 620 =
		St 200 =	BH 312 =	BH 418 =	BH 523 =	BH 636 =
Tool holder and boring bar holder for extended mounting				2 pieces BH 410 =	2 pieces BH 410 =	2 pieces BH 612 =
1 set of clamping sleeves (for small boring tools)		SP 2:	SP 3:	SP 4:	SP 5:	SP 6:
		1/2" : 5/16"	3/4" : 5/16"	7/8" : 5/16"	7/8" : 5/16"	1 1/4" : 7/8"
		1/2" : 3/8"	3/4" : 3/8"	7/8" : 3/8"	7/8" : 3/8"	1 1/4" : 7/8"
			3/4" : 1/2"	7/8" : 1/2"	7/8" : 1/2"	7/8" : 1/2"
			3/4" : 5/8"	7/8" : 5/8"	7/8" : 5/8"	7/8" : 5/8"
				7/8" : 3/4"	7/8" : 3/4"	7/8" : 3/4"
Total price of the complete set of extra equipment	SZ 1 =	SZ 2 =	SZ 3 =	SZ 4 =	SZ 5 =	SZ 6 =
High speed steel square tool bits Price of 1 set = 4 pieces		1/4" □ x 1.57 VD 6 =	1/4" □ x 1.57 VD 6 =	1/4" □ x 1.57 VD 6 =	1/4" □ x 1.57 VD 6 =	3/8" □ x 2 1/2 VD 10 =

UPA 3

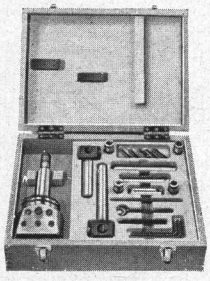

wooden box

containing head and extra equipment

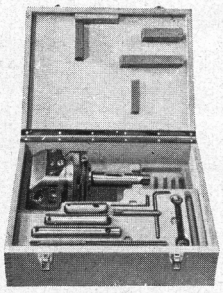

UPA 4

For the heads	UPA 1	UPA 2	UPA 3	UPA 4 and 4 S 5	UPA 5 and 5 S 6	UPA 6 and 6 S 7
designation	HK 111	HK 211	HK 311	HK 411	HK 511	HK 611
Size mm	150×115×75	190×175×70	340×243×95	385×290×133	385×290×133	690×410×230
Weight abt. kg	0,460	0,9	2,5	4,2	4,0	19,2
Price						

No. P 620 E — Printed in Germany

Reinforcing rings for boring bar holders intended to handle great diameters

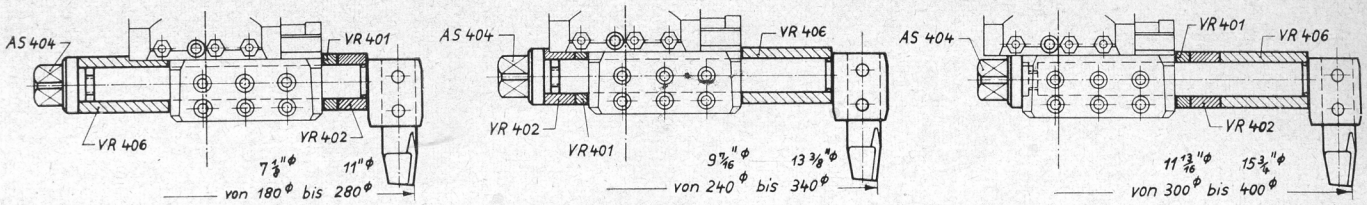

for the heads	UPA 4		UPA 4-S 5		UPA 5		UPA 5-S 6		UPA 6		UPA 6-S 7	
	Size	Price	Size	Price	Size	Price	Size	Price	Size	Price	Size	Price
1 ring	VR 401*	=	VR 401	=	VR 401	=	VR 401	=	VR 601	=	VR 601	=
1 ring	VR 402	=	VR 402	=	VR 402	=	VR 402	=	VR 602	=	VR 602	=
1 ring	VR 406	=	VR 403	=	VR 402	=	VR 406	=	VR 607	=	VR 607	=
1 ring	—	—	—	—	VR 406	=	VR 504,5	=	VR 608	=	VR 608	=
1 tightening screw	AS 404	=	AS 404	=	AS 404	=	AS 509	=	AS 606	=	AS 612	=
price of the complete set	VR 4	=	VR 4s5	=	VR 5	=	VR 5s6	=	VR 6	=	VR 6s7	=

* the figures following the second figure indicate the ring length; thus, VR 406 is 60 mm long

Example showing the use of boring bars and boring bar holders to obtain the diameters and working depths required by means of a UPA 4 head

Boring and facing range

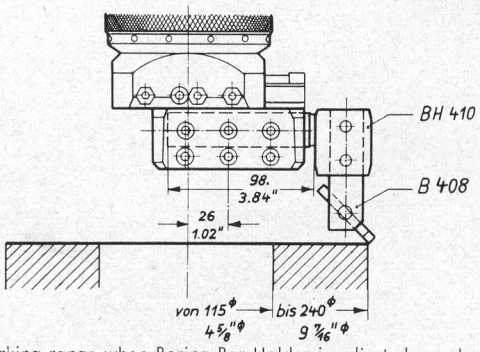

Working range when Boring Bar Holder is adjusted once! up to 8¼" ⌀ without adjustment!

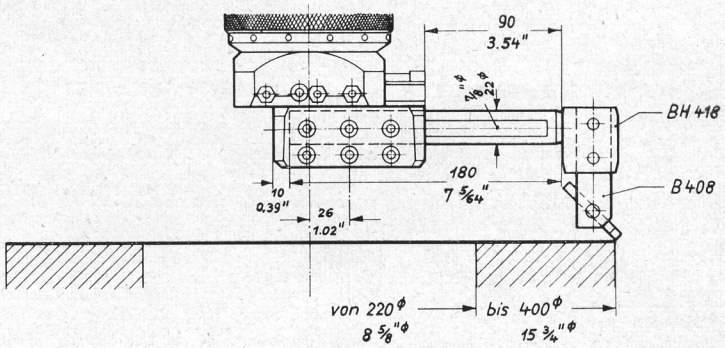

Working range when Boring Bar Holder is adjusted once! up to 12⅜" ⌀ without adjustment!

In a boring and facing range from 0" - 5⅛"⌀ the Boring Bars B 408, B 412 and B 416 are used!

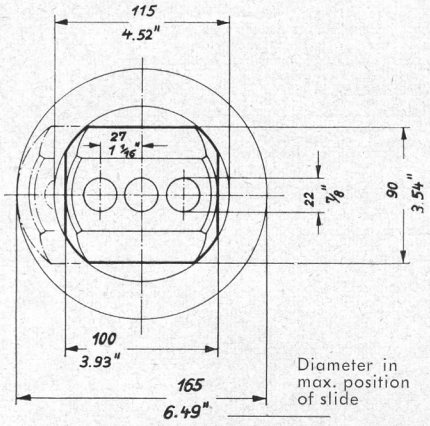

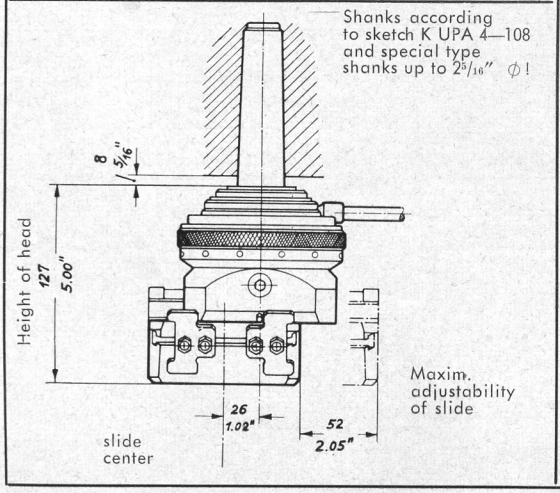

Range of working depth

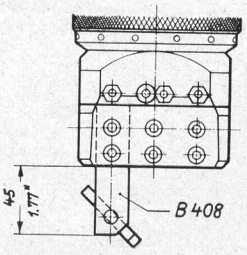

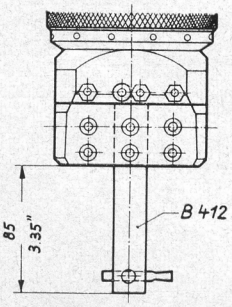

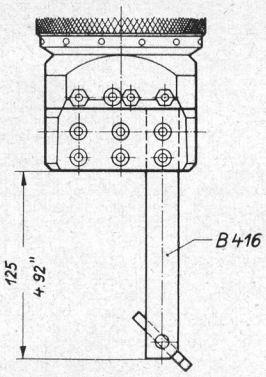

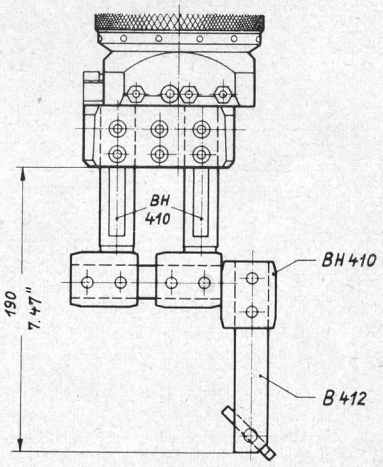

Taper Turning with stationary component by WOHLHAUPTER Facing and Boring Heads UPA4...UPA6 S7

a.) Combination of axial and radial feeds and depth adjustment

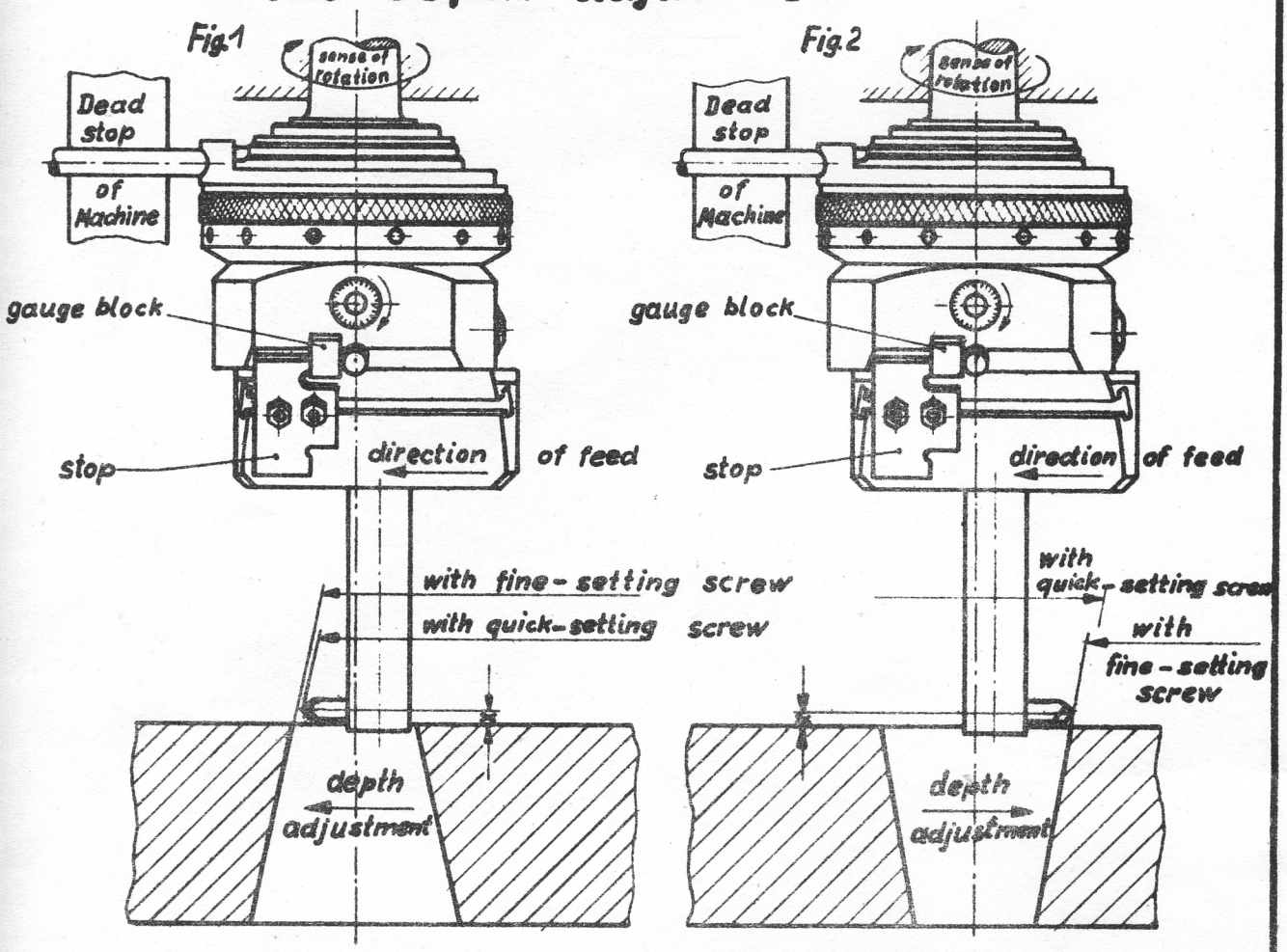

b.) Height adjustment of cutting tool